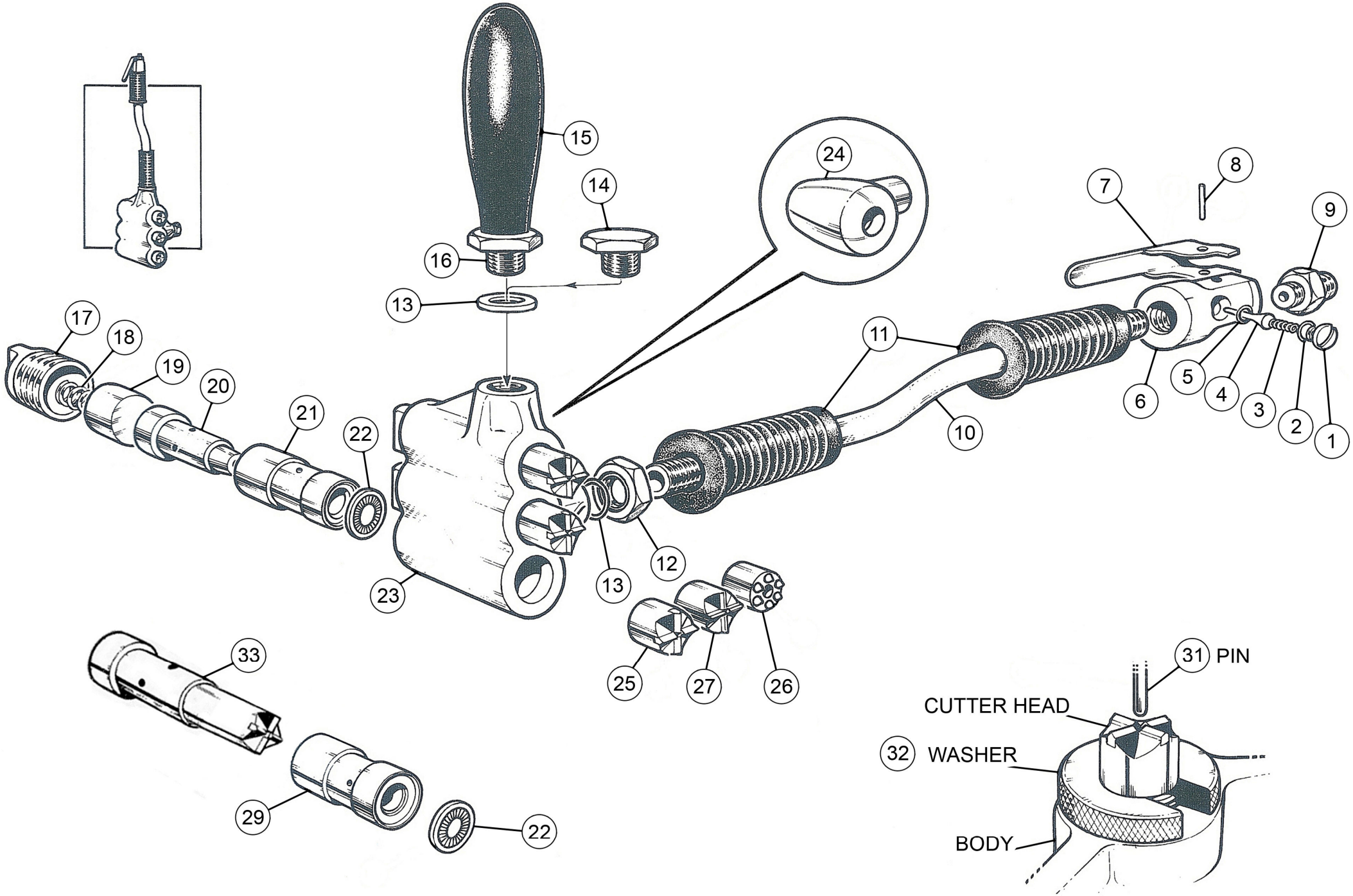
15
14
16
13
24
8
7
9
17
18
19
20
21
22
11
10
6
5
4
3
2
1
23
13
12
25
27
26
33
29
22
31 PIN
CUTTER HEAD
32 WASHER
BODY

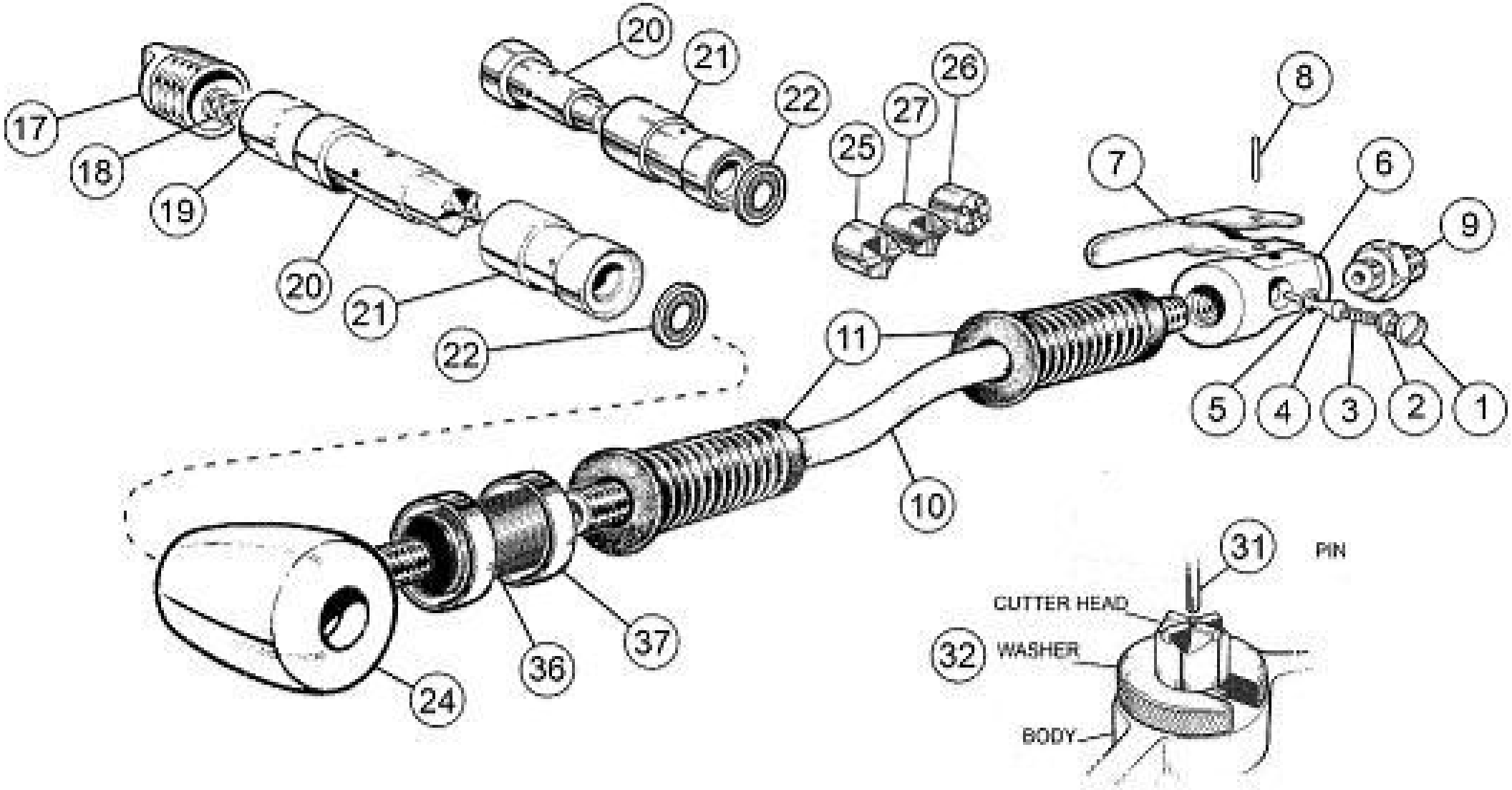
17
18
19
20
21
22
20
21
22
25
27
26
8
7
6
9
11
5
4
3
2
1
10
24
36
37
31
PIN
CUTTER HEAD
32
WASHER
BODY

Item No	Part No	Description	Item No	Part No	Description
1	615.3021	Valve Cap	19	615.5361	Spring Cap
2	809.0139	O' Ring - Valve Cap	20	612.5301	Piston (Std taper fit)
3	712.3022	Valve Spring	21	613.5301	Cylinder (Std taper fit)
4	618.3022	Valve Stem	22	614.5301	Brush Seal
5	809.0089	O' Ring - Valve Seat	23	611.5301	Triple Scaler Body (Std taper fit)
6	616.5321	Valve Body		611.5355	Triple Scaler Body (H/Duty)
	*423.5321	Valve Body Assembly	24	411.5101	Single Scaler Body (Std & H/Duty)
7	716.3000	Throttle Lever		411.5121	Single Scaler Body (Vibration Reduced, Std and H/Duty)
	*716.1000	Throttle Safety Lever	25	426.5351	Cruciform Head (Taper Fit)
8	813.0108	Roll Pin	26	426.5352	Bush Hammer Head (Taper Fit)
9	711.5301	Adaptor	27	606.5303	Beryllium Copper Head (Taper Fit)
10	624.5301	Main Handle (Standard Tools)	28		*Not allocated*
	624.5350	Main Handle (Vibration Reduced)	29	613.5303	Cylinder (H/Duty)
11	717.5301	Rubber Grip	30		*Not allocated*
12	625.5301	Locknut	31	827.0428	Cutterhead Removal Pin
13	810.9001	Sealing Washer	32	633.5301	Cutter Head Removal Washer
14	634.5301	Hexagon Plug	33	612.5320	Single Piece H/Duty Piston (Cruciform)
15	822.5302	Side Handle Grip	34	612.5325	Single Piece H/Duty Piston (Bush)
16	422.5315	Side Handle	35		*Not allocated*
17	615.5341	Screwed Cap	36	719.1380	Flexible Connector
18	712.5301	Compression Spring	37	821.2000	Hose Clamp
					*Items not shown
				633.5301	Single Scaler Vacuum Shroud
				437.5300	Triple Scaler Vacuum Shroud
				731.0120	Vacuum Shroud Seal