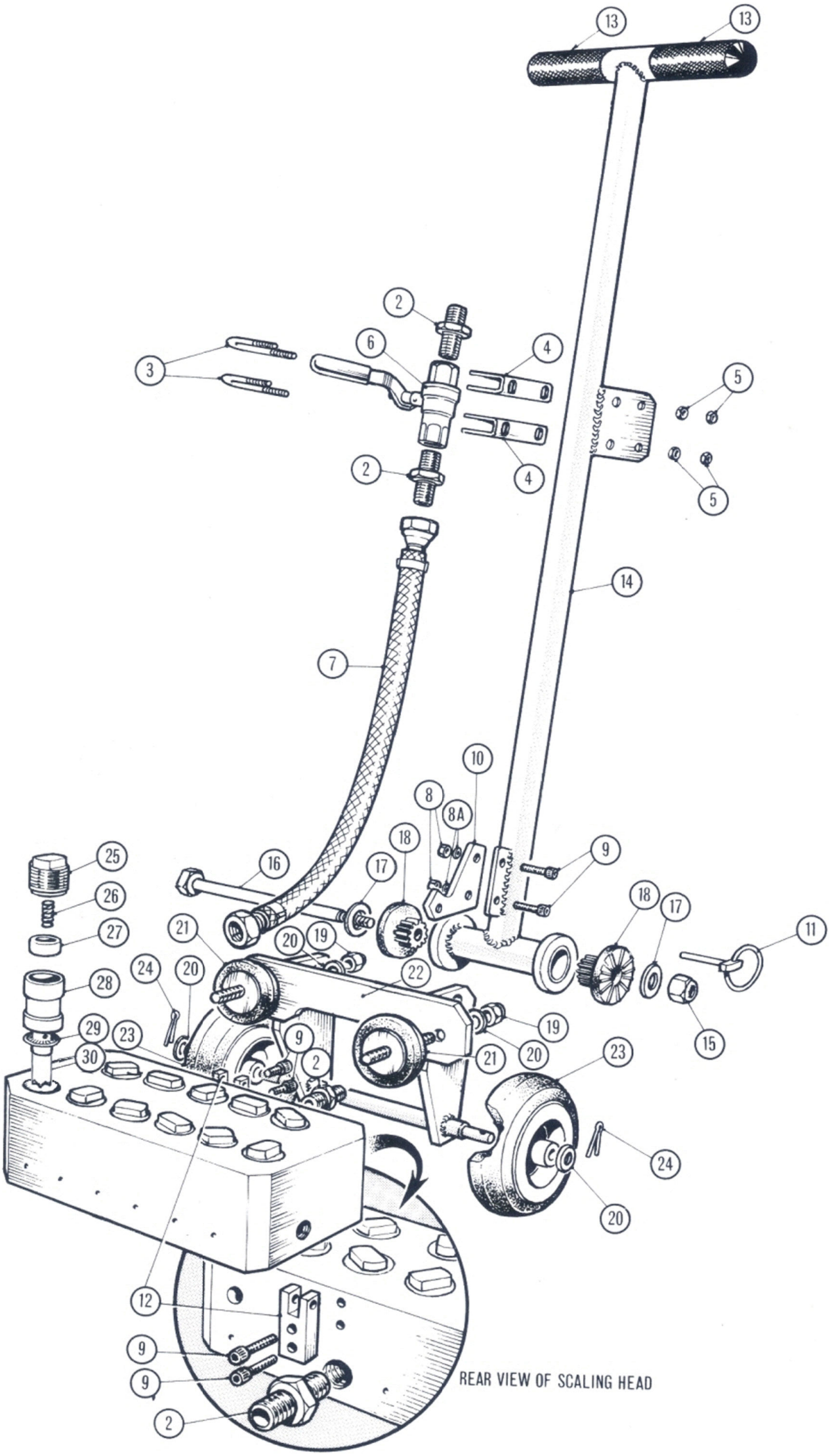
13
13
2
6
4
3
5
2
4
5
14
7
10
8
8A
18
9
25
16
17
26
18
17
27
21
20
19
11
24
20
22
28
19
29
23
9
20
15
30
2
21
23
24
20
12
9
9
2
REAR VIEW OF SCALING HEAD

Item No	Part No	Description	Item No	Part No	Description
2	826.5004	Adaptor 3/4" BSP	20-24	491.1000	Wheel Assembly (set of 2)
3-5	491.2100	U Bolt Assembly (set of 2)	25	615.5341	Screwed Cap
6	828.1000	Ball Valve	26	712.5301	Compression spring
7	719.0750	Armoured Hose Assembly with Couplings	27	615.5361	Spring Cap
8-12	491.3000	Lifting Bracket Assembly	28	613.5301	Cylinder
11	490.2100	Locking Pin (set of 2)	29	614.5301	Brush Seal
13	490.0100	Handle Grip (set of 2)	30	612.5301	Piston (Taper fit)
14	422.0110	Handle including grips	31	426.5351	Cruciform cutter head – (Taper fit)
15-17	491.2000	Handle Mounting Assembly	or	606.5303	Beryllium cutter head – (Taper fit) –spark resistant
18	490.1000	Rubber Handle Mounting			
19-21	491.0100	Rubber Cylinder Block Mtg Assembly (set of 2)			
22	440.0130	Sub Frame			